Uncontrolled Copy

OLCEQK500

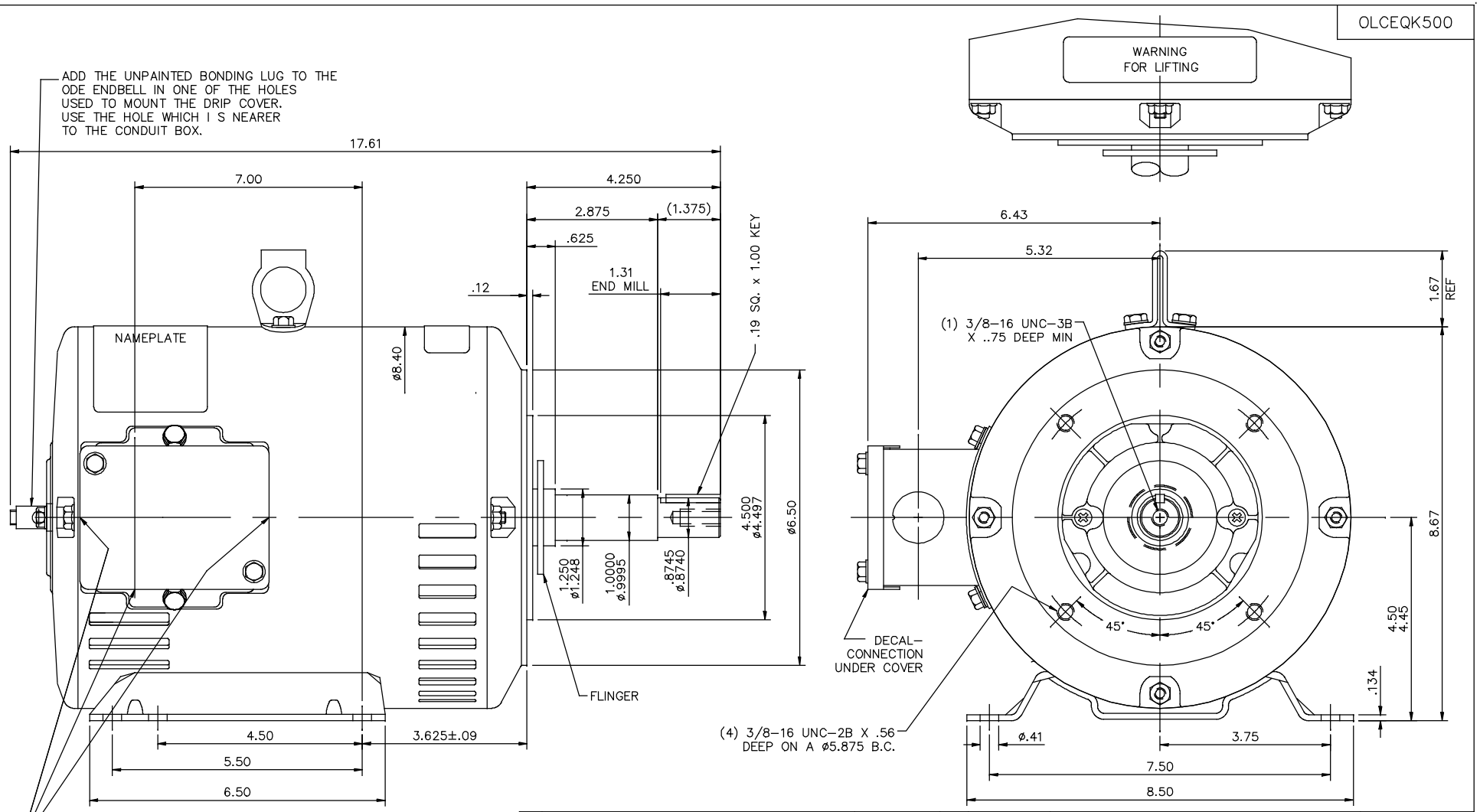

GASKETS THROUGHOUT
MAXIMUM FACE RUNOUT TO BE .004 T.I.R.
MAXIMUM PILOT ECCENTRICITY TO BE .004 T.I.R.
PERMISSIBLE SHAFT RUNOUT TO BE .004 T.I.R.

NO.	REVISION	BY & DATE
A	NEW DRAWING	MVG 07/31/17

TOLERANCES UNLESS SPECIFIED

DEC.	INCHES
.X	±.1
.XX	±.03
.XXX	±.005
.XXXX	±.0005
ANG	±1/2°

MSD CHK RFP DIST

REGAL™ Regal Beloit America, Inc.

TITLE OUTLINE – 180JM FRAME DRIP PROOF – RIGID "C" – JM PUMP

MAT'L. FINISH CAD FILE OLCEQK500

DRAWN	MVG	07/31/2017
CHK	MSD	07/31/2017
APPD	MSD	07/31/2017
SCALE	1=2	
REF	036242	
FMF	184TTDW16321	
PREV		

SIZE B DRAWING NO. OLCEQK500 REV. A

THIS DRAWING IN DESIGN AND DETAIL IS OUR PROPERTY AND MUST NOT BE USED EXCEPT IN CONNECTION WITH OUR WORK ALL RIGHTS OF DESIGN AND INVENTION ARE RESERVED
THIS IS AN ELECTRONICALLY GENERATED DOCUMENT – DO NOT SCALE THIS PRINT