AQUASTAR® pool products

A Safe Drain is No Accident™

10" ROUND DEBRIS CATCHER ANTI-ENTRAPMENT SUCTION OUTLET COVER AND MUD FRAME

VGB Series

The AquaStar line of suction outlet covers, compliant with the Virginia Graeme-Baker Pool and Spa Safety Act (ANSI/APSP 16-2011 and NSF/ANSI 50-2009a)

FEATURES

For single or multiple drain use
3" minimum sump depth
(see installation instructions)

Single – minimum 2" pipe
Floor only – with Sun Lid:
60 GPM at 0.7 fps

Floor only – without Sun Lid:
125 GPM at 1.4 fps

Floor only:
137.5 GPM at 1.5 fps
91.6 GPM at 1.0 fps

When 1.0 or 1.5 fps installations are not required, always use the lower tested flow rate

29.4 square inch opening

Additional sump versions also available

#316 stainless steel screws

Manufactured from superior UV-resistant engineered polymers

Meets or exceeds ANSI/APSP 16-2011 and NSF/ANSI 50-2009a national standards and ASTM G154 UV testing

Replace every five years from the date of installation

6 per case

Part # 10LTxxx

STANDARD COLORS

- 10LT101 – White
- 10LT102 – Black
- 1LT103 – Light Gray
- 10LT104 – Blue
- 10LT105 – Dark Gray
- 10LT108 – Tan

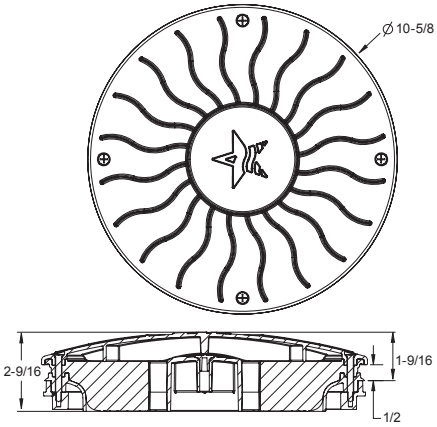

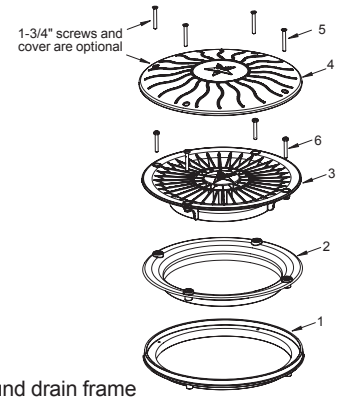

1. 10" round drain frame
2. 10" leaf trapper base
3. 10" leaf trapper drain
4. 10" leaf trapper cover
5. 10 x 1-3/4" flat head Phillips Type A screw, 316 ss, qty 4
6. 10 x 1-1/4" pan-head Phillips screw, 316 ss, qty 4

VGB 2008 Compliant

P 877-768-2717 **F** 877-276-POOL Outside the US: **P** +1-805-620-5060 **F** +1-949-336-1940
info@aquastarpoolproducts.com www.aquastarpoolproducts.com

★★ PROUDLY MADE ★★ IN THE USA

ADDITIONAL PRODUCT CONFIGURATIONS FOR 10LTXXX

Double-Deep Sump

Part #
10LTxxxA
4 per case

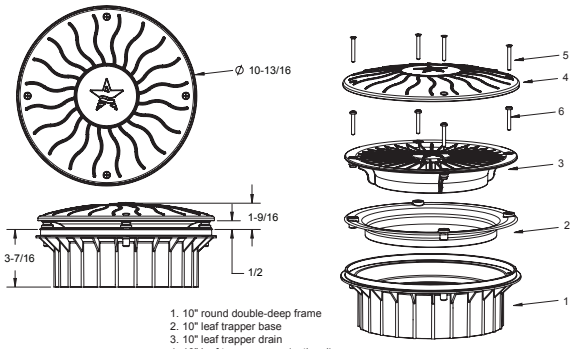

1. 10" round double-deep frame
2. 10" leaf trapper base
3. 10" leaf trapper drain
4. 10" leaf trapper cover (optional)
5. 10 x 1-3/4" flat head Phillips Type A screw, 316 ss, qty 4, (optional)
6. 10 x 1-1/4" pan-head Phillips screw, 316 ss, qty 4

Dual-Port 2½" Spigot x 2" Socket Deep PVC Sump

Part #
10LTxxxB
4 per case

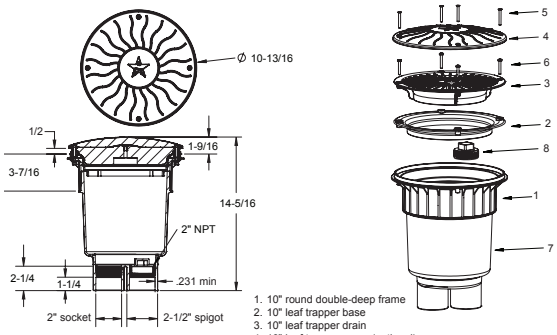

1. 10" round double-deep frame
2. 10" leaf trapper base
3. 10" leaf trapper drain
4. 10" leaf trapper cover (optional)
5. 10 x 1-3/4" flat head Phillips Type A screw, 316 ss, qty 4, (optional)
6. 10 x 1-1/4" pan-head Phillips screw, 316 ss, qty 4
7. Dual-port 2-1/2" spigot x 2" socket deep PVC sump
8. 2" NPT plug

4" Socket Deep PVC Sump

Part #
10LTxxxD
4 per case

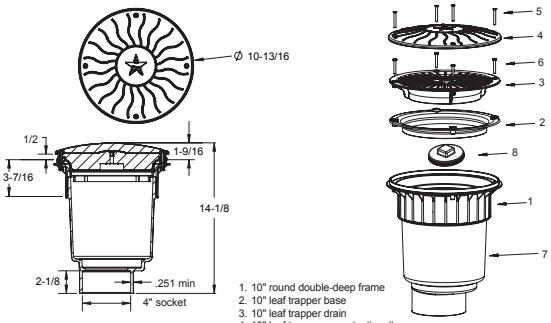

1. 10" round double-deep frame
2. 10" leaf trapper base
3. 10" leaf trapper drain
4. 10" leaf trapper cover (optional)
5. 10 x 1-3/4" flat head Phillips Type A screw, 316 ss, qty 4, (optional)
6. 10 x 1-1/4" pan-head Phillips screw, 316 ss, qty 4
7. 4" socket deep PVC sump
8. 6" NPT plug

6" Socket Deep PVC Sump

Part #
10LTxxxF
4 per case

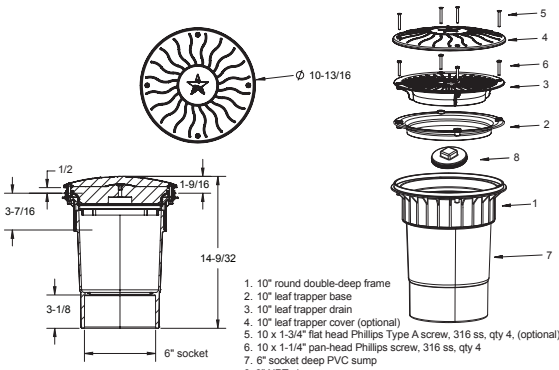

1. 10" round double-deep frame
2. 10" leaf trapper base
3. 10" leaf trapper drain
4. 10" leaf trapper cover (optional)
5. 10 x 1-3/4" flat head Phillips Type A screw, 316 ss, qty 4, (optional)
6. 10 x 1-1/4" pan-head Phillips screw, 316 ss, qty 4
7. 6" socket deep PVC sump
8. 6" NPT plug